BORDER FREE TOPPING APPLICATOR – TRUTOP MC

UNIFORM TOPPING APPLICATION WITH CLEAN CRUSTS



The TruTop MC Border Free Topping Applicator evenly applies shredded cheese, dry ingredients and individually quick frozen (IQF) meats and vegetables onto your pizza or prepared meal line while leaving the edges clean. Its distribution system produces even toppings – ensuring a quality pie. It's designed for maximum efficiency and performance, and ease of use.

- Apply toppings on up to 45 12-inch pizzas per minute
- Uniform border free topping application on flat and raised pizza crusts and prepared meal trays
- Single-lane model available in left- or right-hand configurations
- Superior portion control through integrated load cell technology
- Easy-to-use touch screen panel for simple operation
- Sanitary design with easily removable parts allows for quick, thorough cleaning and maintenance

COMMON FOOD APPLICATIONS

Cheese | IQF Ingredients | Pizza | Plant-based

GROTE®

BORDER FREE TOPPING APPLICATOR – TRUTOP MC

SPECIFICATIONS

Product Size: up to 16”
(406.4 mm) diameter

Application Pattern: up to 15”
(381 mm) diameter

Conveyor Height: 34-38”
(863.6-965.2 mm)

Pneumatic: 60 psi/.1 CFM

Electrical: 230 VAC, 50/60 Hz, 3 Phase

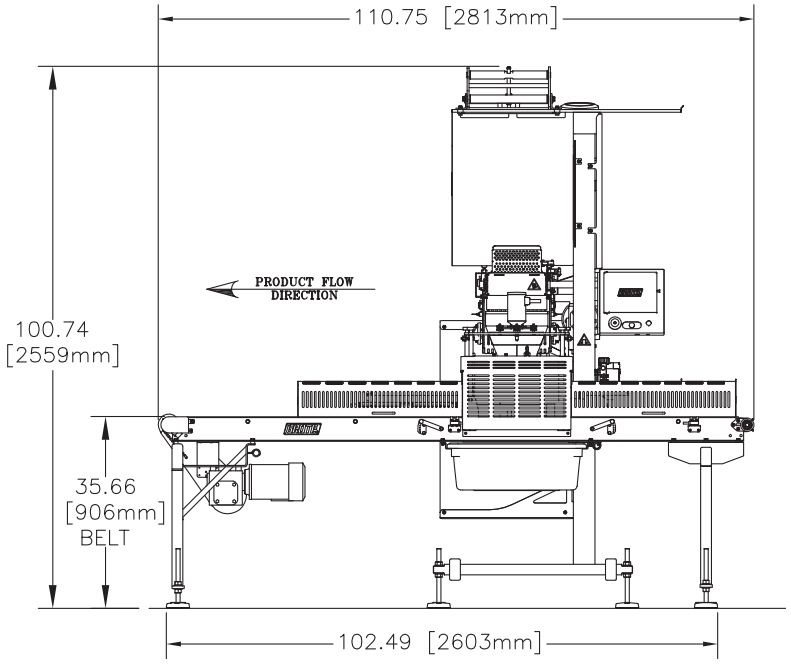

FEATURES/PARTS

- Single-lane model
- Available with left- or right-hand configuration
- Z-conveyor provides groundloading and transfer to hopper available for higher production rates

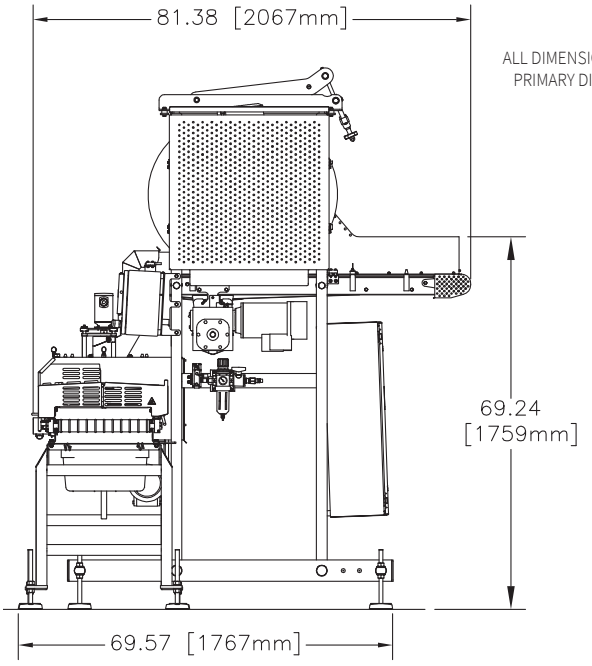

ALL DIMENSIONS ARE APPROXIMATE
PRIMARY DIMENSIONS IN INCHES

OPTIONS

- Sanitary parts cart

This drawing contains confidential information is the exclusive property of the J.E. Grote Co. Neither this document, nor its contents, are to be used, reproduced or disclosed in whole or in part without the express written permission of the J.E. Grote Co. Copyright 2017, J.E. Grote Company, Inc.

CONTACT US

Grote Company is proud to provide top quality equipment, exceptional service and peace of mind worldwide. Contact us for more information or to schedule a demo of the Border Free Topping Applicator – TruTop MC with your product in your exact operating conditions in our Demo Facility.

GROTE®

To feed our growing world - Together

sales@grotecompany.com
grotecompany.com